LEGEND

- STORMWATER CATCHMENT BOUNDARY
- PROPOSED STAGE BOUNDARY
- EXISTING/FUTURE STAGE BOUNDARY
- 0.5 — FINISHED SURFACE CONTOURS
- PROPOSED EASEMENT
- PROPOSED PROPERTY BOUNDARY
- EXISTING/FUTURE PROPERTY BOUNDARY
- DISH DRAIN (INVERT CHANNEL)
- BARRIER KERB AND CHANNEL
- MOUNTABLE KERB AND CHANNEL
- MEDIAN KERB
- TYPE 'M6' KERB
- STORMWATER DRAINAGE
- RWD — RWD — ROOFWATER DRAINAGE
- STORMWATER PIT
- STORMWATER MANHOLE
- 1/10 — STORMWATER STRUCTURE NUMBER
- 1/10 — EXISTING STORMWATER STRUCTURE NUMBER
- SWD — EXISTING STORMWATER DRAINAGE
- ROOFWATER ADAPTOR

STORMWATER NOTES

1. ALL GULLY CONNECTIONS ARE 375Ø CLASS '3' UNLESS SHOWN OTHERWISE.
2. ALL R.C. PIPES ARE ~~TO BE~~ RUBBER RING JOINT UNLESS SHOWN OTHERWISE.
3. GULLY CO-ORDINATES CORRESPONDS TO THE CENTRE OF THE PIT. GULLY SETOUT LEVELS CORRESPONDS TO THE LIP OF THE KERB AND CHANNEL ADJACENT TO THE CENTRE OF THE PIT.
4. ALL PVC ROOFWATER PIPES ARE ~~TO BE~~ CLASS SN6.
5. ALL ROOFWATER LINES ~~SHALL~~ HAVE A MINIMUM COVER OF 500mm AND A MINIMUM GRADE OF 1 IN 100.
6. LOCATION OF ROOFWATER DRAINAGE IS 0.800m OFF R.P. U.N.O. FOR DETAILS REFER TO MACKAY CITY COUNCIL STANDARD DRAWINGS.
7. FOR DETAILS OF ROOFWATER PITS REFER MACKAY CITY COUNCIL STANDARD DRAWINGS.
8. ALL ALLOTMENTS DRAINING TOWARDS THE KERB AND CHANNEL ARE ~~TO BE~~ PROVIDED WITH A KERB ADAPTOR AND PIPE EXTENDING 1m INTO THE PROPERTY, OR A DIRECT PIPE CONNECTION TO A GULLY PIT WHERE ONE IS LOCATED AT THE FRONT OF THE LOT. REFER MACKAY CITY COUNCIL STD DWG No. A3-3871.
9. ALL ALLOTMENTS ~~TO BE~~ SERVED BY THE ROOFWATER DRAINAGE SYSTEM ~~SHALL BE~~ HAVE BEEN PROVIDED WITH 2/90Ø CONNECTIONS TO THE PIT, EXTENDING 500mm PAST THE EXTENTS OF THE PIT. ~~THIS CONNECTION IS NOT TO BE BACKFILLED UNTIL "AS CONSTRUCTED" SURVEY OF THE CONNECTION HAS BEEN COMPLETED BY THE SURVEYOR.~~
10. ~~STABILISED FILL MATERIAL (TO THE SATISFACTION OF THE SUPERINTENDENT) TO BE USED WHERE PIPES EXTEND THROUGH PAVING AREAS.~~
11. ~~SHORING, SHEET PILING OR OTHER STABILISATION SHALL BE PROVIDED WHERE ANY EXCAVATION OR EARTHWORK IS BEING PERFORMED AND THERE IS A RISK TO THE HEALTH AND SAFETY OF A PERSON FROM THE FALL OR DISLODGEMENT OF EARTH, ROCK OR OTHER MATERIAL THAT FORMS THE SIDE OF THE EXCAVATION OR EARTHWORK, OR IS ADJACENT TO THE EXCAVATION OR EARTHWORK, OR IF A WORKER IS REQUIRED TO WORK IN AN EXCAVATION OR OPENING IN THE GROUND THAT IS 1.5 METRES OR MORE IN DEPTH.~~

STORMWATER DESIGN PARAMETERS

* HAT = 3.64m AHD (PIPES AND STRUCTURES BELOW THIS LEVEL TO HAVE SALTWATER COVER)

MHWS = 2.35m AHD (MINIMUM STARTING HGL) OBVERT OF PIPE USED FOR MOST STARTING HGLS AS OBVERT LEVELS ARE ABOVE ADJACENT TAILWATER LEVELS.

THE DESIGN AVERAGE RECURRENCE INTERVAL (ARI) FOR A MAJOR EVENT IS 100 YEARS.

~~THE MINOR SYSTEM DESIGN FOR PITS AND THE PIPE NETWORK IS Q10 FOR STAGES 1R, 1B AND 1A, WHICH IS BASED ON THE ROAD CLASSIFICATION OF EAST POINT DRIVE AND THE DEVELOPMENT ZONING OF LOTS.~~

THE MINOR ARI FOR STAGE 1C IS Q5.

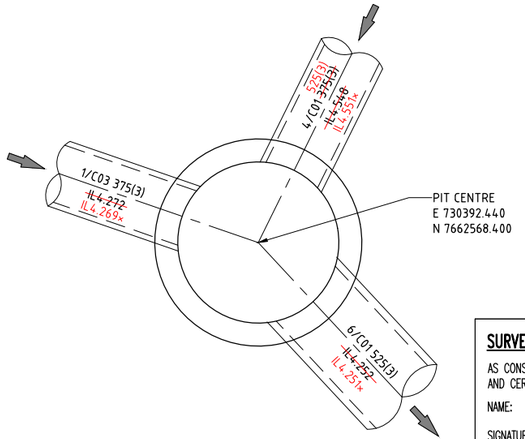

MANHOLE 5-C01 1050mm DIAMETER
SCALE 1:20

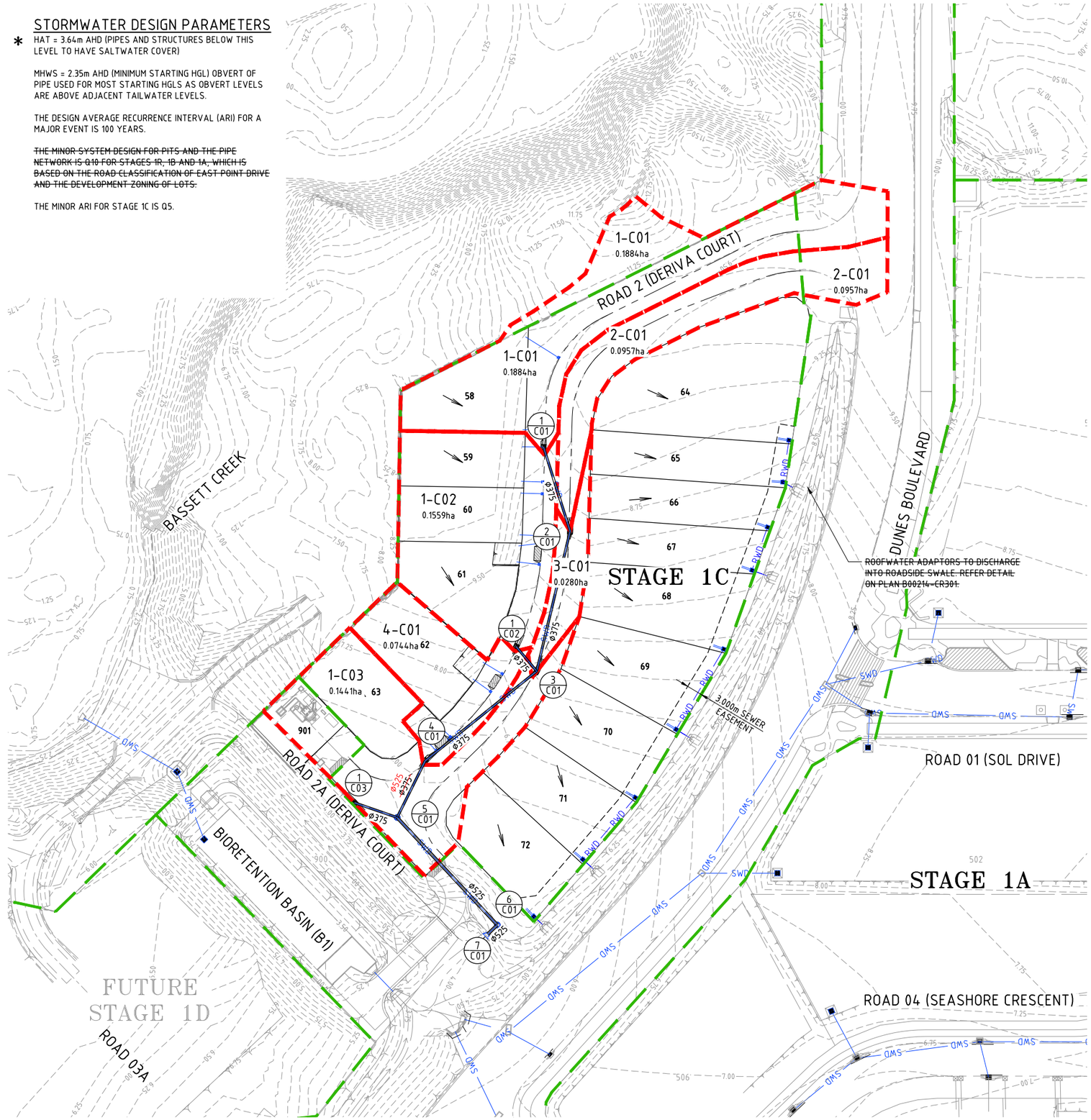

SURVEYOR'S CERTIFICATION

AS CONSTRUCTED INFORMATION SURVEYED BY VERIS AUSTRALIA PTY LTD AND CERTIFIED BY A REGISTARNT OF THE BOARD OF SURVEYORS:

NAME: Alistair Byrom (Delegate)

SIGNATURE: Alistair Byrom DATE 21/09/2022

ENGINEER'S CERTIFICATION

THIS DRAWING IS AN ACCURATE REPRESENTATION OF THE WORKS AND THE AS CONSTRUCTED DETAILS PROVIDED CONFORM WITH THE DESIGN INTENT:

NAME: Chris Hobson RPEQ 12732

SIGNATURE: DATE 27/9/2022

CATCHMENT TABLE

Catchment	Area (Ha)
1-C01	0.1884ha
1-C02	0.1559ha
1-C03	0.1441ha
2-C01	0.0957ha
3-C01	0.0280ha
4-C01	0.0744ha

0 10 20 30 40 50m
10 7.5 5 2.5
SCALE 1:500 (A1) 1:1000 (A3)
DO NOT SCALE USE ONLY THE DIMENSIONS PROVIDED.

AS CONSTRUCTED
Registered Engineer
27/9/2022 Date
12732 Register
ENGINEERING CERTIFICATION

No.	Amendments	Drawn	Design	Design Chk	Appd	Date
0	AS CONSTRUCTED	MC	JT	CH	CH	XX/07/22

This drawing cannot be copied or reproduced in any form or used for any purpose other than that originally intended without the written permission of Empower Engineers and Project Managers © COPYRIGHT 2020

urbex

Empower ENGINEERS & PROJECT MANAGERS ABN 23 010 743 692

Client: EAST POINT MACKAY PTY LTD
Project: EAST POINT DRIVE MACKAY - STAGE 1C
Title: STORMWATER DRAINAGE CATCHMENT PLAN

Datum: AHD PSM 118600 RL 7.152M (MGA) COORD

AS CONSTRUCTED

Project No. B00214-CD301 Drawing No. Rev 0

User: JOSE TURINGAN File Name: C:\12d\S\data\MAN\2DSYN01\B00214_16\4.CIVIL-DRGS\4.4 AS CON\4. Stage 1C\B00214-ASCON-ST1C-SWP Plot Date: 7/09/2022 4:10:41 PM

DocuSign Envelope ID: 621D7A39-AA77-4CD8-ADB5-226881890FC8

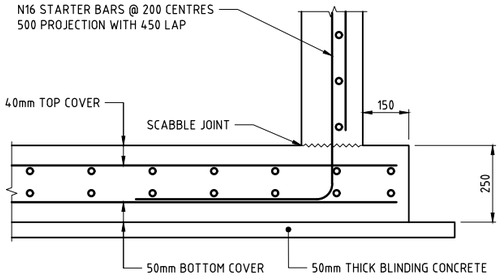

3 - SLAB TO WALL JOINT
SCALE: 1:10 (A1) 1:20 (A3)

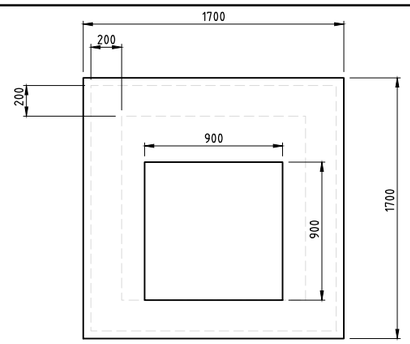

CONVERTOR SLAB - 1200x1200 INTERNAL STRUCTURE
SCALE 1:20 (A1) 1:40 (A3)

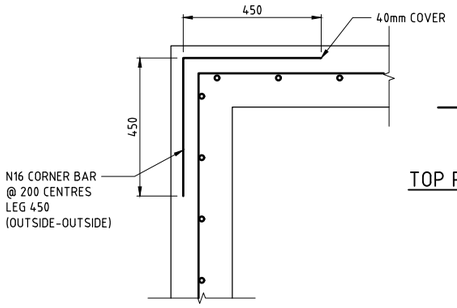

CORNER DETAIL
SCALE: 1:10 (A1) 1:20 (A3)

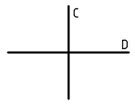

TOP REINFORCEMENT LAYERS

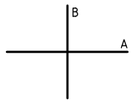

BOTTOM REINFORCEMENT LAYERS

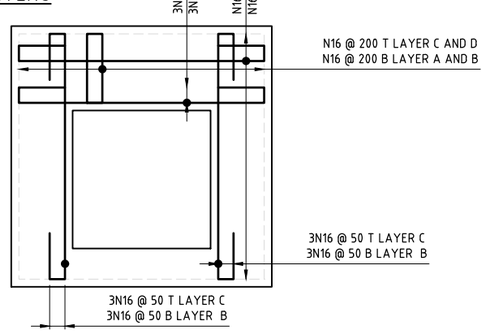

PLAN

NOTES:

1. CONCRETE N40/20/80.
2. CONVERTOR SLAB COVER 40mm TOP (T) AND BOTTOM (B).
3. TOP SLAB CONCRETE ~~TO BE~~ 30MPa PRIOR TO FORMWORK REMOVAL OR LIFTING AND PLACEMENT OF SLAB IF PRECAST.
4. BASE SLAB COVER 40mm TOP (T) AND 50mm BOTTOM (B).
5. PIT WALLS COVER 40mm.

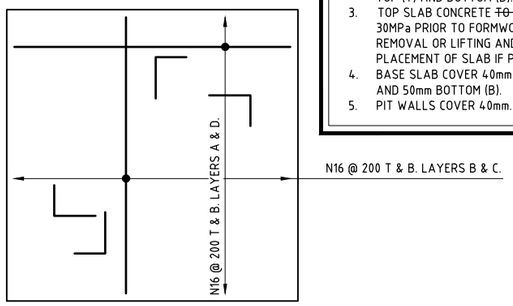

PLAN

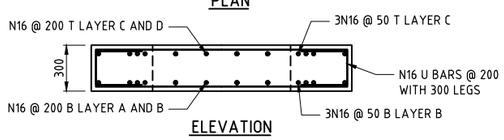

ELEVATION

TYPICAL CONVERTOR SLAB REINFORCEMENT DETAILS
SCALE 1:20 (A1) 1:40 (A3)

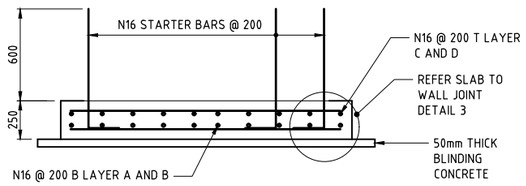

ELEVATION

TYPICAL BASE SLAB REINFORCEMENT DETAILS
SCALE 1:20 (A1) 1:40 (A3)

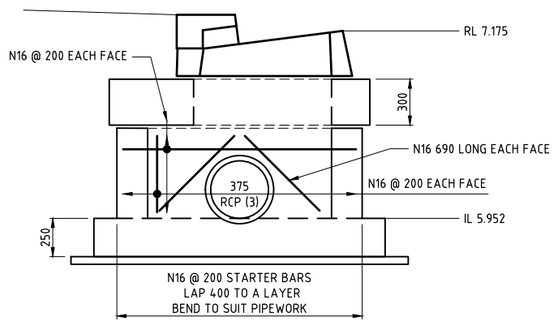

TYPICAL WALL REINFORCEMENT DETAILS
STRUCTURE 3-C01 (1200x1200 INTERNAL)
SCALE 1:20 (A1) 1:40 (A3)

SCALE 1:1000 (A1) 1:2000 (A3)
20 15 10 5 0 20 40 60 80 100m
2.0 1.5 1.0 0.5 0 2 4 6 8 10m
SCALE 1:100 (A1) 1:200 (A3)
DO NOT SCALE USE ONLY THE DIMENSIONS PROVIDED.

SURVEYOR'S CERTIFICATION

AS CONSTRUCTED INFORMATION SURVEYED BY VERIS AUSTRALIA PTY LTD AND CERTIFIED BY A REGISTARNT OF THE BOARD OF SURVEYORS:

NAME: Alistair Byrom (Delegate)
SIGNATURE: Alistair Byrom DATE 21/09/2022

ENGINEER'S CERTIFICATION

THIS DRAWING IS AN ACCURATE REPRESENTATION OF THE WORKS AND THE AS CONSTRUCTED DETAILS PROVIDED CONFORM WITH THE DESIGN INTENT:

NAME: Chris Hobson RPEQ 12732
SIGNATURE: DATE 27/9/2022

NOTE:-

REFER TO DRAWING B00214-CS300 FOR BRIDGING SLAB DETAILS BETWEEN SERVICES

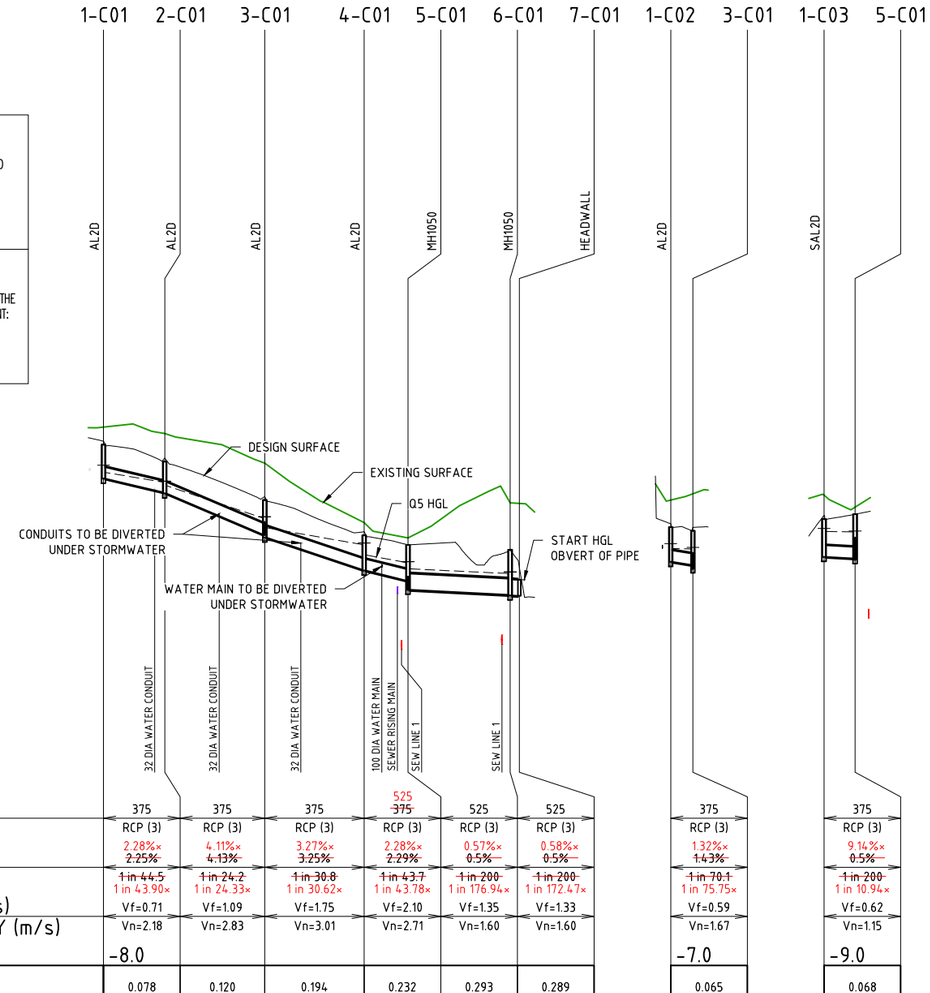

PIPE SIZE (mm)		375		375		375		525 ~~375~~		525		525				375				375			
PIPE CLASS		RCP (3)		RCP (3)		RCP (3)		RCP (3)		RCP (3)		RCP (3)				RCP (3)				RCP (3)			
PIPE GRADE (%)		2.28%× ~~2.25%~~		4.11%× ~~4.13%~~		3.27%× ~~3.25%~~		2.28%× ~~2.29%~~		0.57%× ~~0.5%~~		0.58%× ~~0.5%~~				1.32%× ~~1.43%~~				9.14%× ~~0.5%~~			
PIPE GRADE (1 in)		~~1 in 44.5~~ 1 in 43.90×		~~1 in 24.2~~ 1 in 24.33×		~~1 in 30.8~~ 1 in 30.62×		~~1 in 43.7~~ 1 in 43.78×		~~1 in 200~~ 1 in 176.94×		~~1 in 200~~ 1 in 172.47×				~~1 in 70.1~~ 1 in 75.75×				~~1 in 200~~ 1 in 10.94×			
FULL PIPE VELOCITY (m/s)		Vf=0.71		Vf=1.09		Vf=1.75		Vf=2.10		Vf=1.35		Vf=1.33				Vf=0.59				Vf=0.62			
NORMAL DEPTH VELOCITY (m/s)		Vn=2.18		Vn=2.83		Vn=3.01		Vn=2.71		Vn=1.60		Vn=1.60				Vn=1.67				Vn=1.15			
DATUM (m)		-8.0														-7.0				-9.0			
PIPE FLOW (Cumecs)		0.078		0.120		0.194		0.232		0.293		0.289				0.065				0.068			
PIPE CAPACITY AT GRADE (Cumecs)		0.282		0.342		0.316		0.265		0.304		0.305				0.210				0.124			
WATER LEVEL IN STRUCTURE	8.310		7.792		6.631		5.776		5.166		4.829		4.575		6.754		6.631		5.247		5.166		
HYDRAULIC GRADE LEVEL		8.078	7.758	7.647	6.582	6.273	5.720	5.386	5.135	4.933	4.778	4.587	4.575			6.592	6.582	6.273		5.150	5.135	4.933	
DEPTH TO INVERT		1.109	1.006	1.040	1.129	1.222	1.128	1.151	1.164	1.461	1.472	1.492	0.525			1.133	1.118	1.222		1.236	1.441	1.461	
INVERT LEVEL OF DRAIN		~~7.874~~ 7.864×	7.425× ~~7.425~~	~~7.392~~ 7.372×	6.074× ~~6.046~~	~~5.952~~ 5.929×	4.908× ~~4.898~~	~~4.876~~ 4.870×	4.551× ~~4.548~~	~~4.252~~ 4.251×	4.070× ~~4.085~~	~~4.065~~ 4.063×	4.050 4.048×			~~6.160~~ 6.145×	6.060× ~~6.057~~	~~5.952~~ 5.929×		~~4.322~~ 5.197×	4.269× ~~4.272~~	~~4.252~~ 4.251×	
DESIGN SURFACE LEVEL	8.983		8.431		7.175		6.026		5.729× ~~5.713~~		5.602× ~~5.557~~		4.575		7.293		7.175		5.558		5.713		
PIPE LENGTH RUNNING CHAINAGE	0.000	19.270× ~~19.997~~	19.997	31.579× ~~32.599~~	52.595	31.268× ~~32.437~~	85.032	13.965× ~~14.304~~	99.336	32.026× ~~33.303~~	132.639	2.587× ~~3.000~~	135.639		0.000	6.439× ~~7.229~~	7.229		0.000	10.150× ~~10.139~~	10.139		
EASTING NORTHING	730440.065E 7662645.043N		730442.595E 7662625.207N		730429.488E 7662595.359N		730400.990E 7662579.867N		730392.440E 7662568.400N		730410.429E 7662540.373N		730407.929E 7662538.715N		730425.909E 7662601.640N		730429.488E 7662595.359N		730383.602E 7662573.371N		730392.440E 7662568.400N		
LINE		C01														C02				C03			

AS CONSTRUCTED

Registered Engineer
27/9/2022 12732
Date Register

ENGINEERING CERTIFICATION

No.	Amendments	Drawn	Design	Design Chk	Appd	Date
0	AS CONSTRUCTED	MC	JT	CH	CH	XX/07/22

This drawing cannot be copied or reproduced in any form or used for any purpose other than that originally intended without the written permission of Empower Engineers and Project Managers © COPYRIGHT 2020

urbex

Empower ENGINEERS & PROJECT MANAGERS ABN 23 010 743 692

Client: EAST POINT MACKAY PTY LTD
Project: EAST POINT DRIVE MACKAY - STAGE 1C
Title: STORMWATER DRAINAGE LONGITUDINAL SECTIONS AND STORMWATER PIT REINFORCING DETAILS

Datum: AHD PSM 118600 RL 7.152M (MGA) COORD

AS CONSTRUCTED

Project No. / Drawing No.: B00214-CD302
Rev: 0

User: JOSE TURINGAN File Name: C:\ZdS\data\MANZDS\N0\B0024_ks\4_CIVIL-DRGS\4.4 AS CONS\4. Stage 1C\B00214-ASCON-STRC-SWL
Plot Date: 7/09/2022 4:10:53 PM

DocuSign Envelope ID: 621D7A39-AA77-4CD8-ADB5-226881890FC8

STRUCTURE LEGEND

AL2D - STD GULLY - LIP IN LINE; 2.4m Lintel; MOUNTABLE K&C
AL3D - STD GULLY - LIP IN LINE; 3.6m Lintel; MOUNTABLE K&C
AL4D - STD GULLY - LIP IN LINE; 4.8m Lintel; MOUNTABLE K&C
AL2E - STD GULLY - LIP IN LINE; 2.4m Lintel; BARRIER K&C
AL3E - STD GULLY - LIP IN LINE; 3.6m Lintel; BARRIER K&C

SAL2D - STD GULLY (SAG) - LIP IN LINE; 2.4m Lintel; MOUNTABLE K&C
SAL3D - STD GULLY (SAG) - LIP IN LINE; 3.6m Lintel; MOUNTABLE K&C
SAL2E - STD GULLY (SAG) - LIP IN LINE; 2.4m Lintel; BARRIER K&C
SAL3E - STD GULLY (SAG) - LIP IN LINE; 3.6m Lintel; BARRIER K&C

SF1 - STD FIELD INLET - 900x900 TYPE 1
SF2 - STD FIELD INLET - 900x600 TYPE 2
SF2VEE - STD FIELD INLET WITH 'V' SHAPED GRATE - 900x600 TYPE 2

MH - MANHOLE - 1050mm DIA
HW - HEADWALL
PC - PIPE CONNECTION - NO MANHOLE
CHNL - OPEN CHANNEL

NOTES

1. GULLY INLET CAPACITY FOR 'AL' PITS HAS BEEN CALCULATED FROM BRISBANE CITY COUNCIL GULLY INLET CAPACITY CHARTS, WHICH STATES THAT BLOCKAGE FACTORS ON GRADE ARE 10% OF CAPTURE, IN SAG NO BLOCKAGE FACTOR AS THE CHARTS EXCLUDE GRATE FLOW. REFER MCC STD DWG A3-3884 AND A3-3885 FOR DETAILS.
2. GULLY INLET CAPACITY FOR 'SF' FIELD INLET PITS BASED ON WEIR / ORIFICE FLOWS WITH BLOCKAGES AS PER QUDM REQUIREMENTS. REFER MCC STD DWG A3-3882 FOR DETAILS.
3. REFER MCC STD DWG A3-3891 FOR DETAILS OF ANTI-POND PITS.

CALCULATION TABLES

LOCATION: 1 DESIGN ARI (MINOR) Yrs	1 DESIGN ARI (MAJOR) Yrs	2 STRUCTURE No.	3 DRAIN SECTION	4 No. of CONT. CATCHMENTS	TIME: 5 LOT USE	6 SLOPE OF CATCHMENT (%)	7 tc TIME OF CONCENTRATION (min.)	SUBCATCHMENT RUNOFF: 8 I RAINFALL INTENSITY (FROM INTENSITY CHART) mm/hr	9 C COEFFICIENT OF RUNOFF (MINOR)	9 C COEFFICIENT OF RUNOFF (MAJOR)	10 A SUB-CATCHMENT AREA (Ha)	11 (CxA) EQUIVALENT AREA (9 x 10) Ha	12 ∑(CxA) SUM OF CONT. EQUIV. AREAS (∑11) Ha	13 Q SUB-CATCHMENT DISCHARGE ((8 x 12)/360) m³/s	14 FLOW PAST PREVIOUS GULLIES (∑25) m³/s
5	100	1-C01	1-C01 to 2-C01	1		2.50	6.00	192.40		1.00	0.188	0.156	0.156	0.084	0.000
5	100	2-C01	2-C01 to 3-C01	2		2.98	5.00	204.60	0.84	1.00	0.096	0.080	0.080	0.046	0.000
5	100	3-C01	3-C01 to 4-C01	4		1.92	5.00	204.60	0.84	1.00	0.028	0.024	0.024	0.013	0.000
5	100	4-C01	4-C01 to 5-C01	5		3.53	6.00	192.40	0.83	1.00	0.074	0.062	0.062	0.033	0.010
5	100	5-C01	5-C01 to 6-C01	6		2.50									
5	100	6-C01	6-C01 to 7-C01	6		2.50									
5	100	7-C01				2.50									
5	100	1-C02	1-C02 to 3-C01	1		4.05	6.00	192.40	0.83	1.00	0.156	0.129	0.129	0.069	0.006
5	100	3-C01				2.50									
5	100	1-C03	1-C03 to 5-C01	1		2.82	5.00	204.60	0.83	1.00	0.144	0.120	0.120	0.068	0.000
5	100	5-C01				2.50									

2 STRUCTURE No.	INLET DESIGN: 15 FLOW IN K&C (INCLUDING BYPASS) (13 + 14) m³/s	16 ROAD GRADE AT INLET %	17 K - K WIDTH m	18 Wf FLOW WIDTH m	19 dg FLOW DEPTH AT INVERT m	20 Vg GUTTER FLOW VELOCITY m/s	21 dg xVg (20 x 19) m²/s	22 INLET NUMBER	23 INLET TYPE (Refer Legend)	24 Qg FLOW INTO INLET (From Charts) m³/s	25 BYPASS FLOW (15 - 24) m³/s
1-C01	0.084	1.91	6.00	2.385	0.083	1.01	0.08	1-C01	AL2D	0.078	0.005
2-C01	0.046	3.85	6.00	1.656	0.063	1.11	0.07	2-C01	AL2D	0.046	
3-C01	0.013	3.82	6.00	0.970	0.043	0.84	0.04	3-C01	AL2D	0.013	
4-C01	0.043	3.07	6.00	1.696	0.064	1.00	0.06	4-C01	AL2D	0.043	
5-C01			6.00					5-C01	MH1050		
6-C01			6.00					6-C01	MH1050		
7-C01			6.00					7-C01	HW		
1-C02	0.075	4.19	6.00	1.972	0.072	1.29	0.09	1-C02	AL2D	0.065	0.010
3-C01			6.00					3-C01	AL2D		
1-C03	0.068	0.07	6.00		0.020			1-C03	SAL2D	0.068	
5-C01			6.00					5-C01	MH1050		

2 STRUCTURE No.	DRAIN DESIGN: 26 tc CRITICAL TIME OF CONC. min	27 I RAINFALL INTENSITY (MINOR) mm/hr	27 I RAINFALL INTENSITY (MAJOR) mm/hr	28 ∑(CxA) TOTAL CONT. EQUIV. AREA (∑12 (U/S) MINOR) Ha	28 ∑(CxA) TOTAL CONT. EQUIV. AREA (MAJOR) Ha	29 Qt MAJOR TOTAL FLOW ((27 x 28)/360) m³/s	30 Qm MAJOR SURFACE FLOW CAPACITY m³/s	31 Qs MAJOR SURFACE FLOW m³/s	32 Qo FLOW IN PIPE (MINOR) m³/s	32 Qo FLOW IN PIPE (MAJOR) m³/s	33 L REACH LENGTH m	34 S PIPE GRADE %	35 PIPE/BOX DIMENSIONS mm	36 V FLOW VELOCITY (32/Area of Sect.) m/s	37 T TIME OF FLOW IN REACH (33/(36 x 60)) min
1-C01	6.00	192.40	339.90	0.156	0.188	0.178			0.078	0.130	19.997	2.63	375	2.20	0.15
2-C01	6.17	190.73	337.00	0.237	0.284	0.266			0.120	0.199	32.599	3.76	375	2.81	0.19
3-C01	6.44	188.02	332.27	0.390	0.468	0.432			0.194	0.253	32.437	3.25	375	3.01	0.18
4-C01	6.71	185.31	327.57	0.451	0.542	0.494			0.232	0.139	14.304	2.63	375	2.87	0.08
5-C01	6.45	187.90	332.07	0.561	0.675	0.622			0.293	0.454	33.303	0.50	525	1.60	0.35
6-C01	6.73	185.13	327.25	0.561	0.675	0.613			0.289	0.445	3.000	0.50	525	1.60	0.03
7-C01															
1-C02	6.00	192.40	339.90	0.129	0.156	0.147			0.065	0.081	7.229	1.43	375	1.67	0.07
3-C01															
1-C03	5.00	204.60	361.00	0.120	0.144	0.144			0.068	0.331	10.139	0.50	375	1.15	0.15
5-C01															

HEADLOSSES: 38 Ku METHOD	39 Ku CHART	40 $V^2/2g$ VELOCITY HEAD ((36 x 36)/2g) m	41 Ku U/S HEADLOSS COEFF. (FROM QUDM VOL. 2)	42 hu U/S PIPE STRUCTURE HEADLOSS (40 x 41) m	43 K_L LAT. HEADLOSS COEFFICIENT (FROM QUDM VOL. 2)	44 h_L LAT. PIPE STRUCTURE HEADLOSS m	45 Kw W.S.E. COEFFICIENT (FROM QUDM VOL. 2)	46 hw CHANGE IN W.S.E. m	47 Sf FRICTION SLOPE (FROM SECT. 14.5.7 A.R.R. VOL. 1 1987) %	48 hf PIPE FRICTION HEADLOSS m	PART FULL: 49 DEPTH m	50 Vp VELOCITY m/s	DESIGN LEVELS: 51 OBVERT LEVELS U/S m	51 OBVERT LEVELS D/S m	52 DRAIN SECTION HGL U/S m	52 DRAIN SECTION HGL D/S m	53 U/S HGL m	54 LATERAL HGL m	55 WSE m	56 SURFACE or K&C INVERT LEVEL m	57 FREEBOARD m	58 STRUCTURE No.
Ku,Kw - Missouri/ Hare	G2	0.03	9.07	0.230				0.232	2.020	0.456	0.134	2.20	8.217	7.691	8.047	7.644	8.278		8.278	8.983	0.705	1-C01
Ku,Kw - Missouri/ Hare	T3/T6	0.06	1.82	0.110			2.38	0.144	2.920	1.006	0.154	2.81	7.654	6.426	7.534	6.582	7.677		7.677	8.431	0.754	2-C01
Ku,Kw - Missouri/ Hare	T6/T9	0.16	1.97	0.310			2.28	0.357	1.700	0.585	0.212	3.01	6.327	5.273	6.273	5.720	6.630		6.630	7.175	0.545	3-C01
Ku,Kw - Missouri/ Hare	T3/T6	0.23	1.48	0.330			1.73	0.391	1.760	0.251	0.258	2.87	5.251	4.875	5.386	5.135	5.777		5.777	6.026	0.250	4-C01
Ku,Kw - Missouri/ Hare	T6/T9	0.09	2.16	0.200			2.50	0.234	0.460	0.154	0.414	1.60	4.777	4.610	4.933	4.778	5.166		5.166	5.713	0.546	5-C01
Ku,Kw - Missouri/ Hare	T10	0.09	2.11	0.190			2.66	0.242	0.410	0.013	0.408	1.60	4.590	4.575	4.587	4.575	4.829		4.829	5.543	0.714	6-C01
																	4.575		4.575	4.825		7-C01
Ku,Kw - Missouri/ Hare	G2	0.02	9.26	0.160				0.162	0.140	0.010	0.143	1.67	6.535	6.432	6.592	6.582	6.753		6.753	7.293	0.540	1-C02
																	6.630		6.630	7.175		3-C01
Ku,Kw - Missouri/ Hare	G2	0.02	5.04	0.100				0.097	0.150	0.015	0.198	1.15	4.697	4.647	5.150	5.135	5.247		5.247	5.558	0.310	1-C03
																	5.166		5.166	5.713		5-C01

SURVEYOR'S CERTIFICATION

AS CONSTRUCTED INFORMATION SURVEYED BY VERIS AUSTRALIA PTY LTD AND CERTIFIED BY A REGISTARNT OF THE BOARD OF SURVEYORS:

NAME: Alistair Byrom (Delegate)

SIGNATURE: *Alistair Byrom* DATE 21/09/2022

ENGINEER'S CERTIFICATION

THIS DRAWING IS AN ACCURATE REPRESENTATION OF THE WORKS AND THE AS CONSTRUCTED DETAILS PROVIDED CONFORM WITH THE DESIGN INTENT:

NAME: Chris Hobson RPEQ 12732

SIGNATURE: [signature] DATE 27/9/2022

AS CONSTRUCTED

No.	Amendments	Drawn	Design	Design Chk	Appd	Date
0	AS CONSTRUCTED	MC	JT	CH	CH	XX/07/22

Registered Engineer: 27/9/2022 — Register: 12732

ENGINEERING CERTIFICATION

This drawing cannot be copied or reproduced in any form or used for any purpose other than that originally intended without the written permission of Empower Engineers and Project Managers © COPYRIGHT 2020

urbex

Empower ENGINEERS & PROJECT MANAGERS ABN 23 010 743 692

Client: EAST POINT MACKAY PTY LTD

Project: EAST POINT DRIVE MACKAY - STAGE 1C

Title: STORMWATER DRAINAGE CALCULATION TABLE

Datum: AHD PSM 118600 RL 7.152M (MGA) COORD

AS CONSTRUCTED

Project No. / Drawing No.: B00214-CD303 — Rev: 0

Plot Date: 7/09/2022 6:11:03 PM User: JOSE TURINGAN

DocuSign Envelope ID: 621D7A39-AA77-4CD8-ADB5-226881890FC8

STORMWATER DESIGN PARAMETERS

* HAT = 3.64m AHD (PIPES AND STRUCTURES BELOW THIS LEVEL TO HAVE SALTWATER COVER)

MHWS = 2.35m AHD (MINIMUM STARTING HGL) OBVERT OF PIPE USED FOR MOST STARTING HGLS AS OBVERT LEVELS ARE ABOVE ADJACENT TAILWATER LEVELS.

THE DESIGN AVERAGE RECURRENCE INTERVAL (ARI) FOR A MAJOR EVENT IS 100 YEARS.

~~THE MINOR SYSTEM DESIGN FOR PITS AND THE PIPE NETWORK IS Q10 FOR STAGES 1R, 1B AND 1A, WHICH IS BASED ON THE ROAD CLASSIFICATION OF EAST POINT DRIVE AND THE DEVELOPMENT ZONING OF LOTS.~~

THE MINOR ARI FOR STAGE 1C IS Q5.

MAJOR ARI FLOW WIDTHS

FLOW WIDTH NOTES

1. THE WIDTHS SHOWN HAVE BEEN DERIVED USING 12D SOFTWARE.
2. CALCULATED FLOWS ARE FOR THE INTERNAL LOCAL CATCHMENT FLOWING TO BASSETT CREEK WITH A HAT LEVEL OF 3.64m AHD.

SURVEYOR'S CERTIFICATION

AS CONSTRUCTED INFORMATION SURVEYED BY VERIS AUSTRALIA PTY LTD AND CERTIFIED BY A REGISTARNT OF THE BOARD OF SURVEYORS:

NAME: Alistair Byrom (Delegate)

SIGNATURE: Alistair Byrom DATE 21/09/2022

ENGINEER'S CERTIFICATION

THIS DRAWING IS AN ACCURATE REPRESENTATION OF THE WORKS AND THE AS CONSTRUCTED DETAILS PROVIDED CONFORM WITH THE DESIGN INTENT:

NAME: Chris Hobson RPEQ 12732

SIGNATURE: DATE 27/9/2022

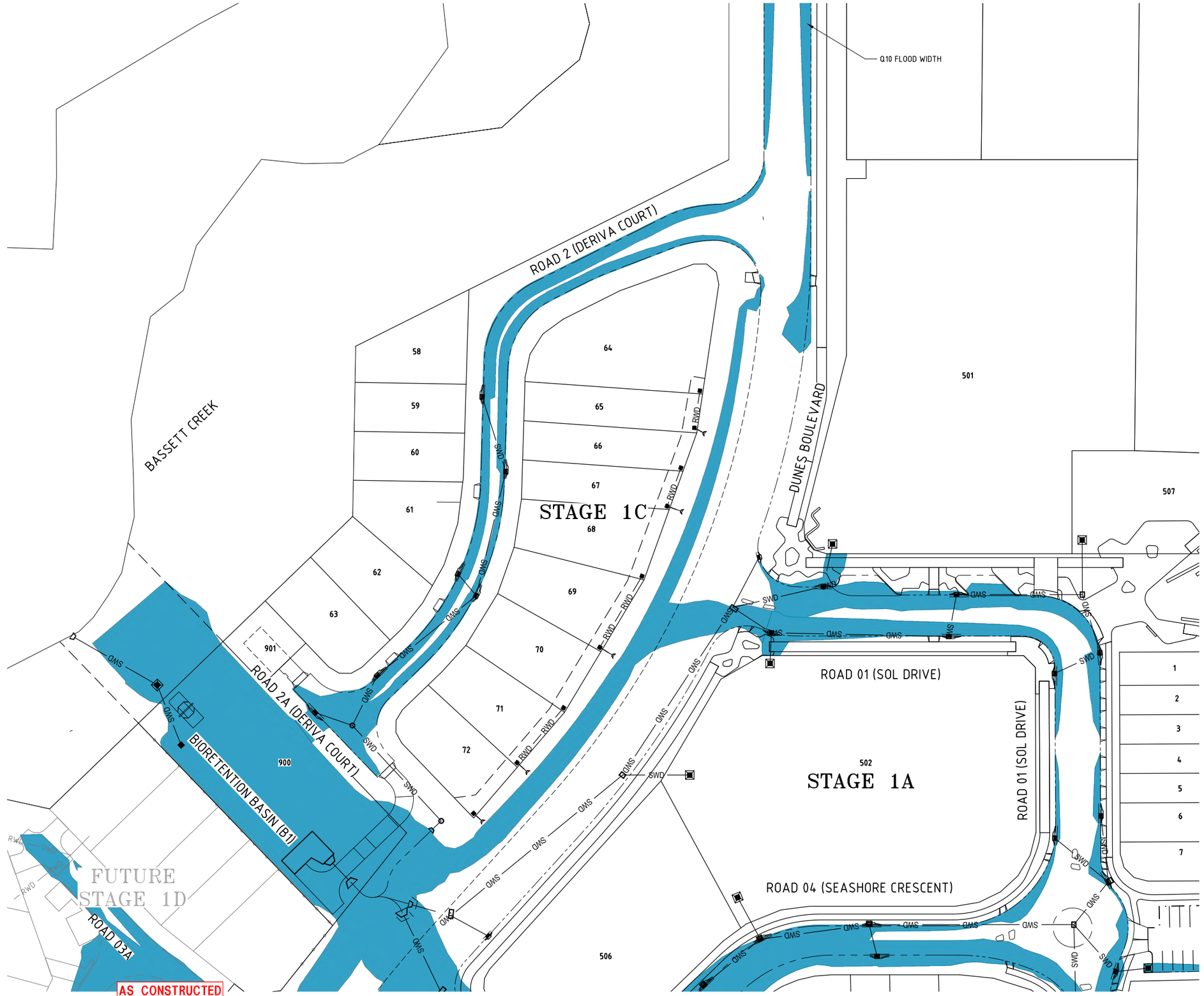

0 10 20 30 40 50m

10 7.5 5 2.5

SCALE 1:500 (A1) 1:1000 (A3)

DO NOT SCALE USE ONLY THE DIMENSIONS PROVIDED.

AS CONSTRUCTED

Registered Engineer 27/9/2022 12732

Date Register

ENGINEERING CERTIFICATION

No.	Amendments	Drawn	Design	Design Chk	Appd	Date
0	AS CONSTRUCTED	MC	JT	CH	CH	XX/07/22

This drawing cannot be copied or reproduced in any form or used for any purpose other than that originally intended without the written permission of Empower Engineers and Project Managers © COPYRIGHT 2020

urbex

Empower ENGINEERS & PROJECT MANAGERS ABN 23 010 743 692

Client: EAST POINT MACKAY PTY LTD

Project: EAST POINT DRIVE MACKAY - STAGE 1C

Title: STORMWATER DRAINAGE MAJOR STORM EVENT FLOW WIDTHS

Datum: AHD PSM 118600 RL 7.152M (MGA) COORD

AS CONSTRUCTED

Project No. B00214 Drawing No. CD305 Rev 0

User: JOSE TURINGAN File Name: C:\12d5\data\MAN12DS\N01\B00214_14.14 CIVIL-DRGS\4.4 AS CON\4. Stage 1C\B00214-ASCON-S1TC-SWNU MAJ

Plot Date: 7/09/2022 4:11:21 PM

DocuSign Envelope ID: 621D7A39-AA77-4CD8-ADB5-226881890FC8